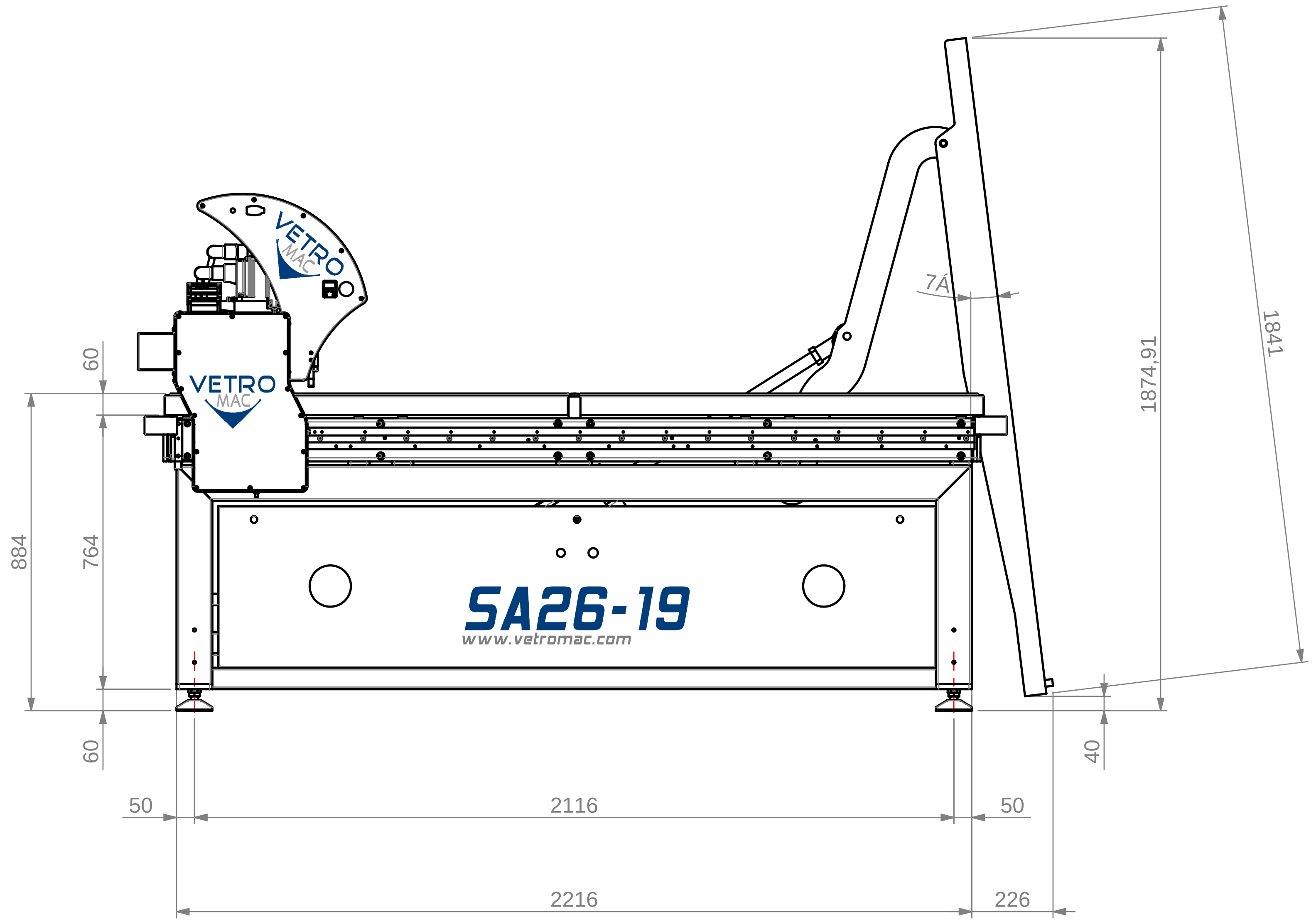

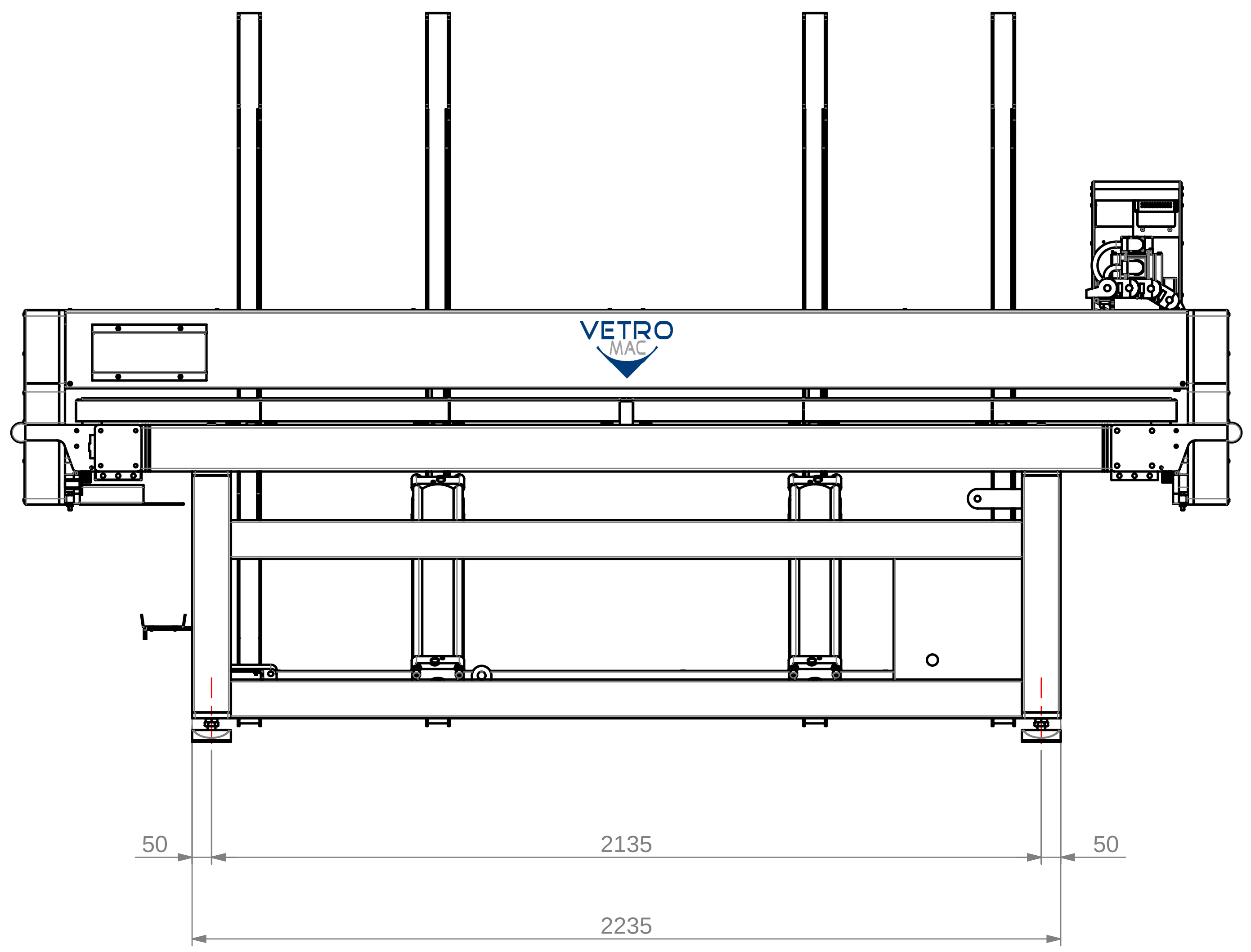

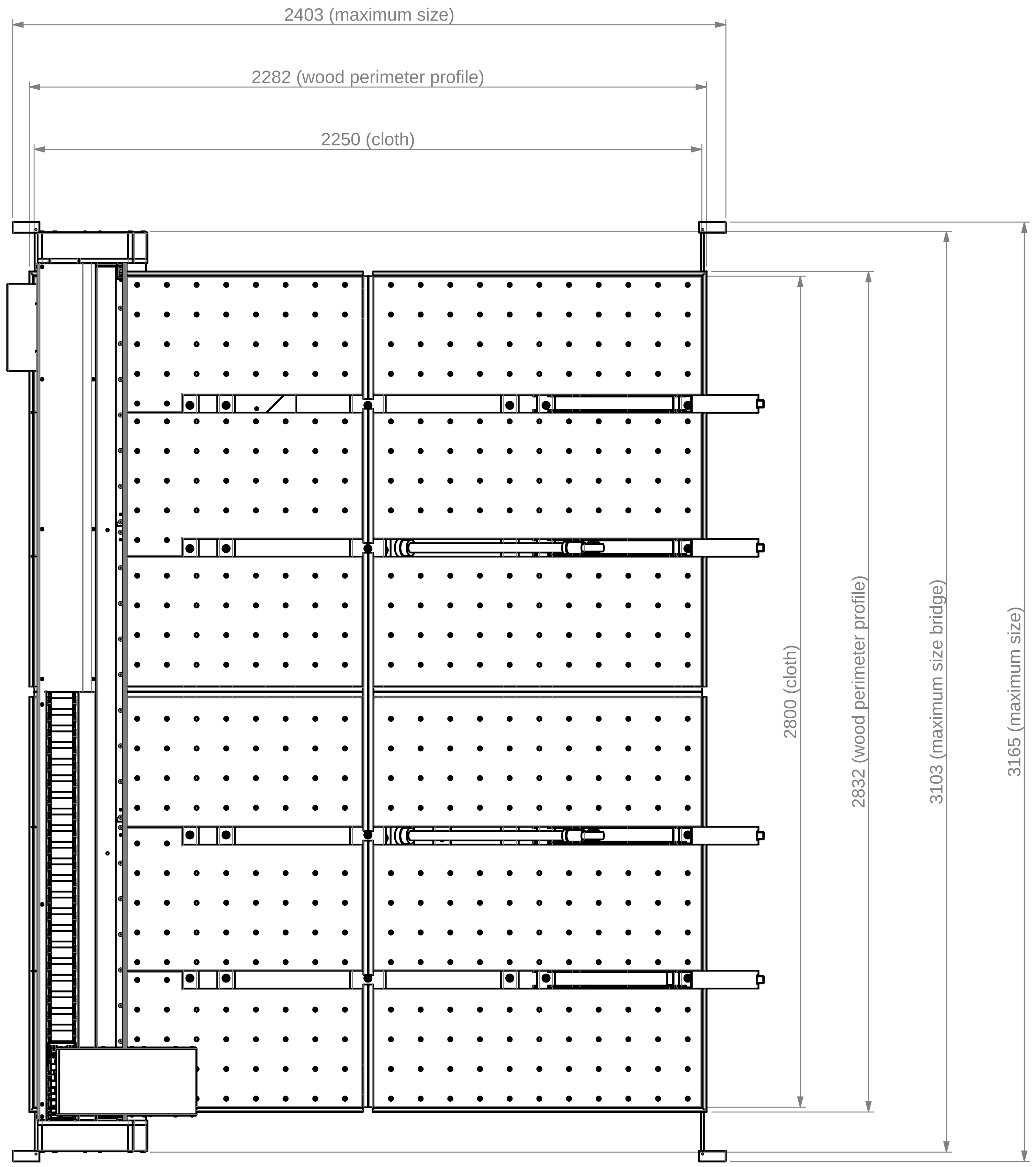

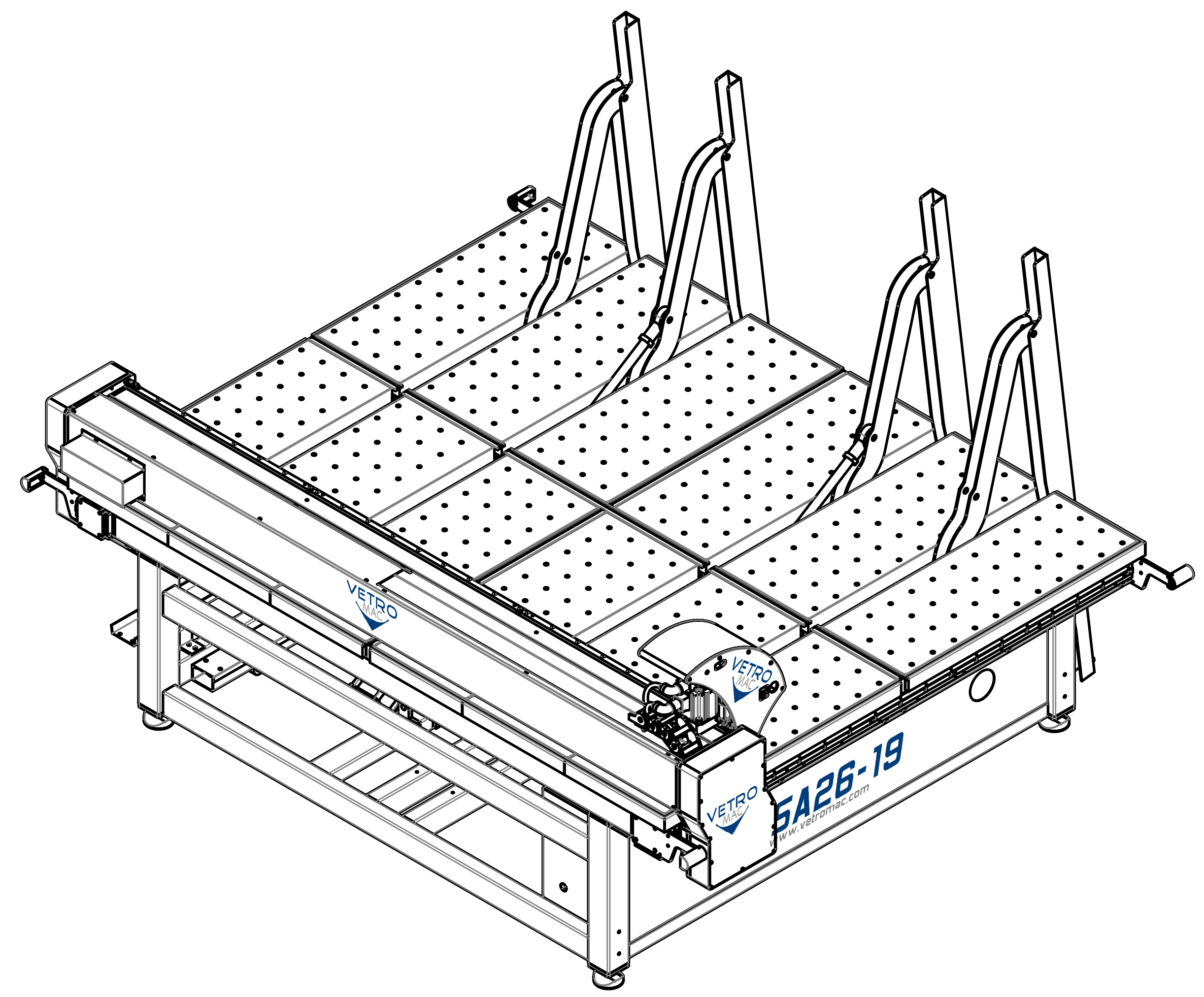

Note:

0	14-11-2014	SS	Issue
Review	Date	Author	Description change

			Designer	Approved
F^Z I nk^ I ñpbmahnmñ mhe^kZg\^ñbg]b\Zmbhgñ3 Zo^kZ`^ñ]^`k^^ñh_ñik^\bIbhg NGBñ>Gñ++0/1ê*3*22/ñ	@khni Ibs^ =^obZmbhgI	Date	14-11-2014	14-11-2014
		Sign	SS	-

Weight :	Material :	Roughness :	SCALE :
1159.314 Kg	See bill of materials	-	1:17.5
RAL painting : -	Treatments & Surface finish : -	Chamfers unlisteds : -	SHEET SIZE : A2

Description : Layout SA26-19

Code : 01.A.007.0.SA26-19 layout